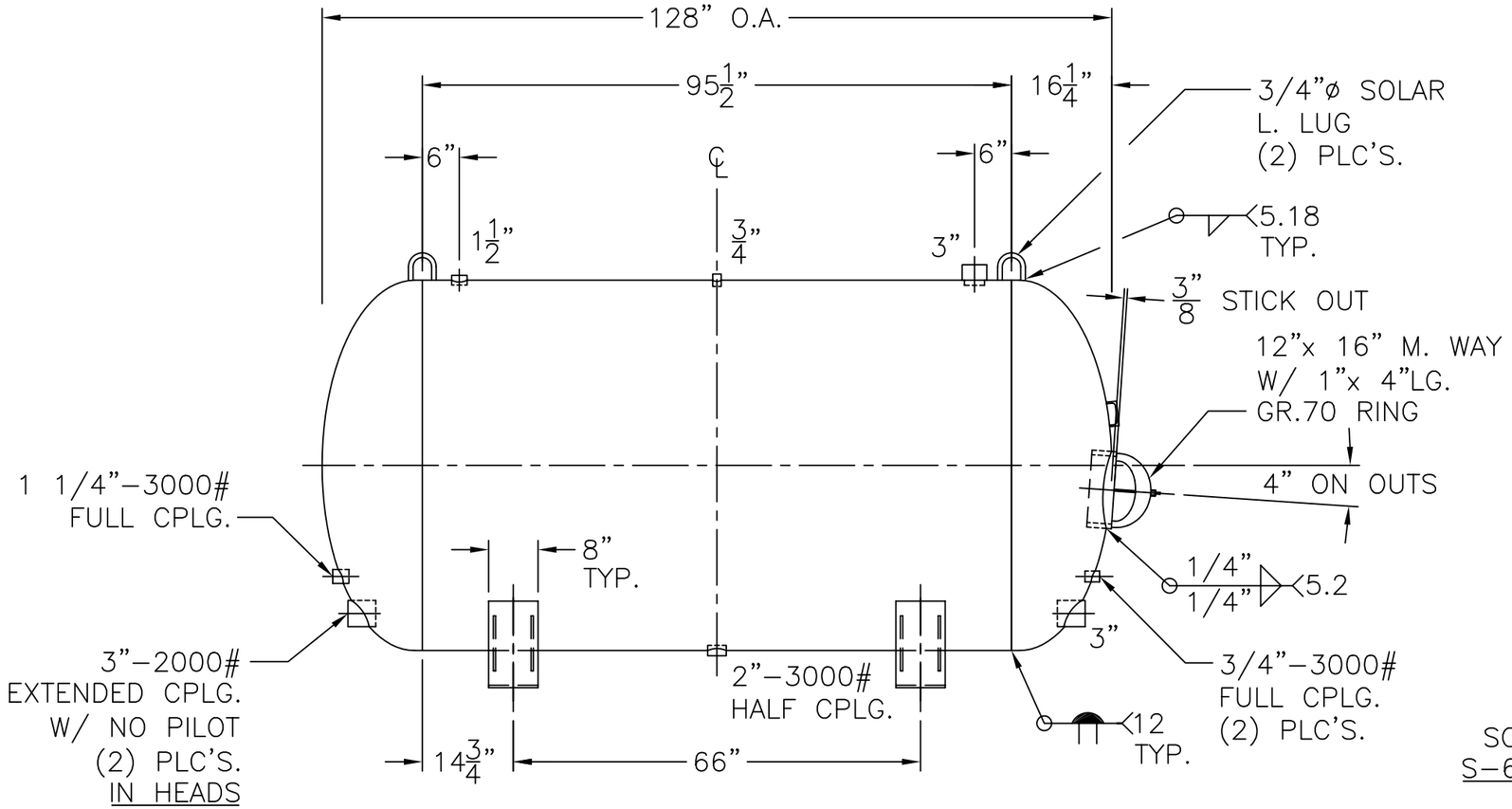

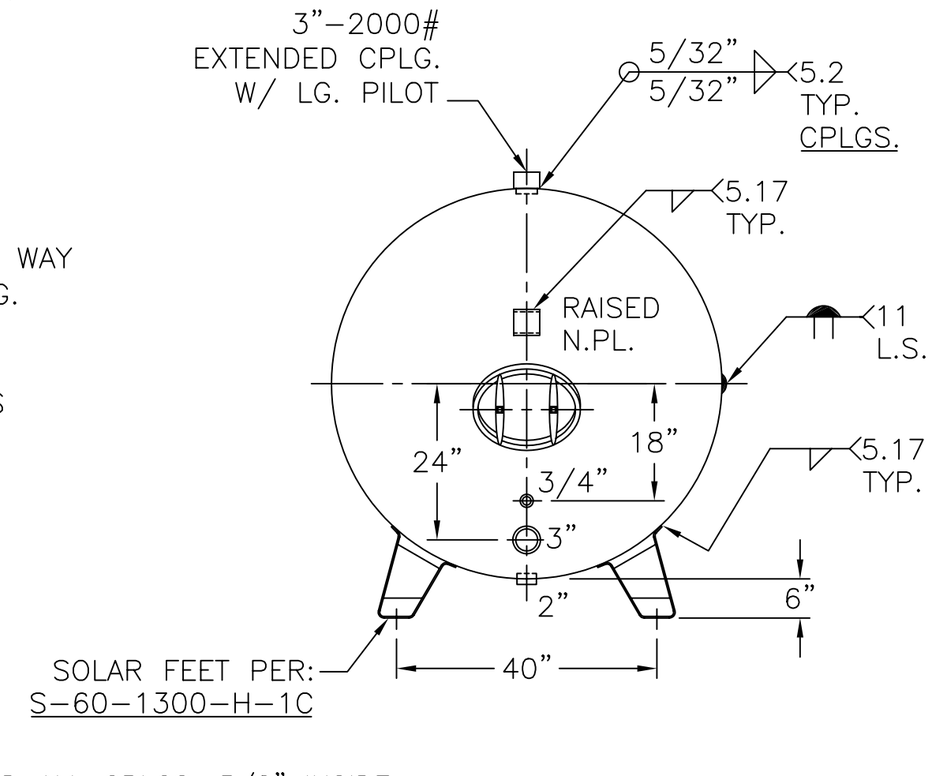

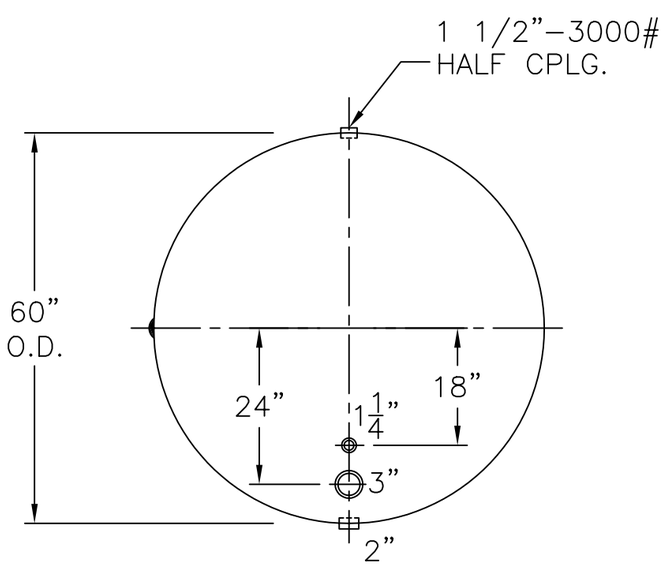

VIEW W/OUT SUPT'S

3) EXTEND ALL CPLGS. 5/8" INSIDE.
2) HYDRO @ 163 PSIG.
NOTE: 1) SEAL ALL OPENINGS TO KEEP CEMENT MOIST TO PREVENT CRACKING.

SHELL / HEADS	.248" SA-455 2:1 S.E.	CS-60-1450-H — REV. 9-21-04
	(.211" MIN.)	DATE: 10-5-89
		FOR: HANSON STANDARD
		HORIZ. WATER TANK.
	.207" SA-455	180.2 SQ. FT. SURFACE AREA. THIS TANK IS SHIPPED WITH ALL OPENINGS SEALED. THE CEMENT LINING MUST BE KEPT MOIST BEFORE, DURING, AND AFTER INSTALLATION TO PREVENT CRACKING OF THE CEMENT.
M.A.W.P. 125 PSIG. @ 210 °F		
M.D.M.T. -20 °F @ 125 PSIG.		INSIDE: CEMENT LINED (1395)
ASME. SECTION VIII DIV. 1, 2001 ADD 2003		OUTSIDE: PRIME
X-RAY: RT-4 SPOT L.S. & HDS. G.S.		CAD "B" SIZE UNDER "STD"-SERIES
GALLONS: 1450	WT. 3280 LBS.	BY: J.G. — SCALE: 1/2"=12"
SERIAL NO.		ROY E. HANSON JR. MFG.
N.B.		1924 COMPTON AVE. LOS ANGELES, CA 90011